6BE6

PENTAGRID CONVERTER

Miniature Type

TENTATIVE DATA

RCA-6BE6 is a miniature multi-electrode vacuum tube of the single-ended type designed to perform simultaneously the functions of a mixer (first detector) tube and of an oscillator tube in superheterodyne circuits.

GENERAL DATA

Electrical:

Heater, for Unipotential Cathode:		
Voltage (AC or DC)	6.3	Volts
Current	0.3	Ampere
Direct Interelectrode Capacitances:*		
Grid No. 3 to All Other Electrodes (RF Input) [$C_{g_3(h+k+g_1+g_2+g_4+g_5)}$]	7.2	$\mu\mu$f
Plate to All Other Electrodes (Mixer Output) [$C_{p(h+k+g_1+g_2+g_3+g_4+g_5)}$]	8.6	$\mu\mu$f
Grid No. 1 to All Other Electrodes (Oscillator Input) [$C_{g_1(h+k+g_2+g_3+g_4+g_5+p)}$]	5.5	$\mu\mu$f
Grid No. 3 to Plate [C_{g_3p}]	0.30 max.	$\mu\mu$f
Grid No. 1 to Grid No. 3 [$C_{g_1g_3}$]	0.15 max.	$\mu\mu$f
Grid No. 1 to Plate [C_{g_1p}]	0.05 max.	$\mu\mu$f
Grid No. 1 to All Other Electrodes Except Cathode [$C_{g_1(h+g_2+g_3+g_4+g_5+p)}$]	2.7	$\mu\mu$f
Grid No. 1 to Cathode [C_{g_1k}]	2.8	$\mu\mu$f
Cathode to All Other Electrodes Except Grid No. 1 [$C_{k(h+g_2+g_3+g_4+g_5+p)}$]	15	$\mu\mu$f

Mechanical:

Mounting Position	Any
Maximum Overall Length	2 1/8"
Maximum Seated Length	1 7/8"
Length from Base Seat to Bulb Top (excluding tip)	1 1/2" ± 3/32"
Maximum Diameter	3/4"
Bulb	T-5 1/2
Base	Miniature Button 7-Pin

CONVERTER

Maximum Ratings, *Design-Center Values:*

PLATE VOLTAGE	300 max.	Volts
GRIDS-No. 2 & No. 4 VOLTAGE	100 max.	Volts
GRIDS-No. 2 & No. 4 SUPPLY VOLTAGE	300 max.	Volts
PLATE DISSIPATION	1.0 max.	Watt
GRIDS-No. 2 & No. 4 DISSIPATION	1.0 max.	Watt
TOTAL CATHODE CURRENT	14 max.	Ma.
GRID-No. 3 VOLTAGE:		
Negative Bias Value	50 max.	Volts
Positive Bias Value	0 max.	Volts
PEAK HEATER-CATHODE VOLTAGE:		
Heater negative with respect to cathode	90 max.	Volts
Heater positive with respect to cathode	90 max.	Volts

Characteristics—Separate Excitation:†

Plate Voltage	100	250	Volts
Grids-No. 2 & No. 4 (Screen) Voltage	100	100	Volts
Grid-No. 3 (Control Grid) Voltage	−1.5	−1.5	Volts
Grid-No. 1 (Oscillator Grid) Resistor	20000	20000	Ohms
Plate Resistance (Approx.)	0.5	1.0	Megohm
Conversion Transconductance	455	475	Micromhos
Conversion Transconductance (Approx.)‡	4	4	Micromhos
Plate Current	2.8	3.0	Milliamperes
Grids-No. 2 & No. 4 Current	7.3	7.1	Milliamperes
Grid-No. 1 Current	0.5	0.5	Milliampere
Total Cathode Current	10.6	10.6	Milliamperes

NOTE: The transconductance between grid No. 1 and grids No. 2 & No. 4 connected to plate (not oscillating) is approximately 7250 micromhos under the following conditions: grids No. 1 & No. 3 at 0 volts; grids No. 2 & No. 4 and plate at 100 volts. Under the same conditions, the plate current is 25 milliamperes, and the amplification factor is 20.

* With no external shield.

† The characteristics shown with separate excitation correspond very closely with those obtained in a self-excited oscillator circuit operating with zero bias.

‡ With grid-No. 3 bias of −30 volts.

SOCKET CONNECTIONS

Bottom View

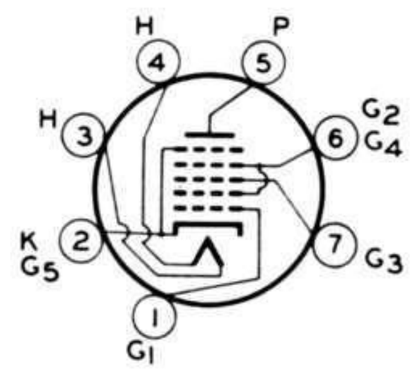

7CH

Pin 1 : Grid No. 1
Pin 2 : Cathode, Grid No. 5
Pin 3 : Heater
Pin 4 : Heater
Pin 5 : Plate
Pin 6 : Grid No. 2, Grid No. 4
Pin 7 : Grid No. 3

DIMENSIONAL OUTLINE

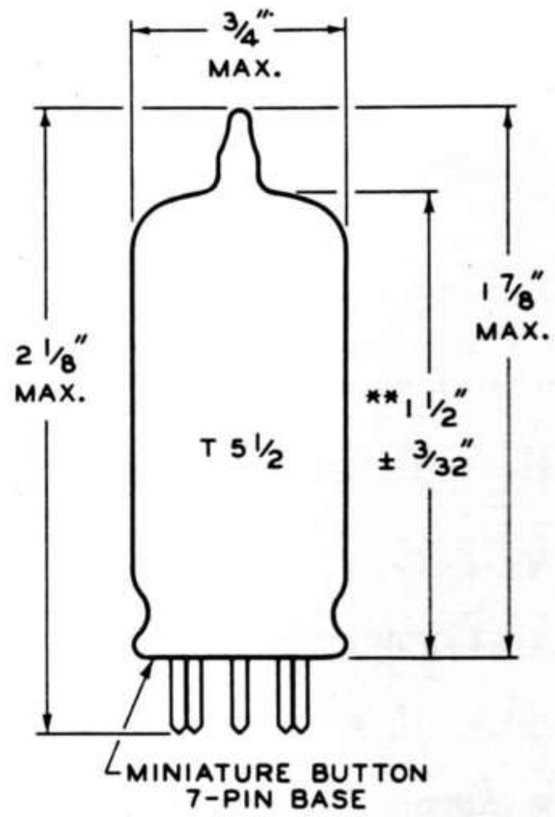

** Measured from base seat to bulb-top line as determined by ring gauge of 7/16" I.D.

TYPICAL SELF-EXCITED CONVERTER CIRCUIT FOR TYPE 6BE6

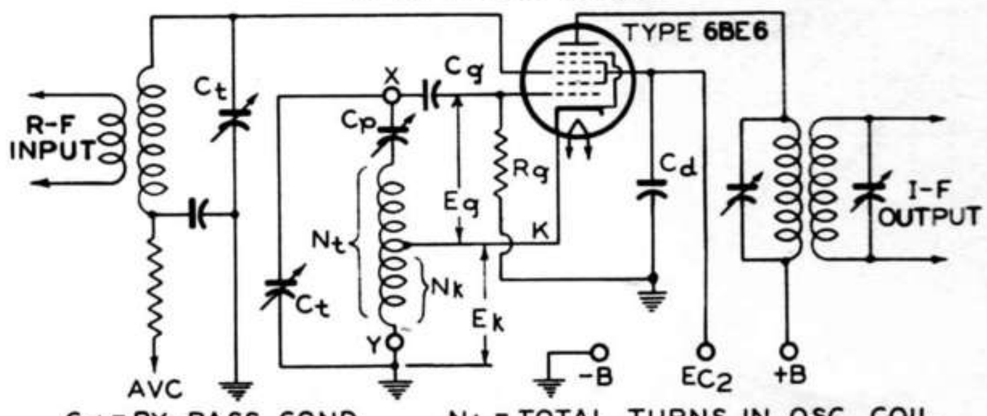

Cd = BY-PASS COND.
Cg = 50 μμf
Cp = PADDING COND.
Ct = TUNING COND.

Nt = TOTAL TURNS IN OSC. COIL
Nk = TURNS IN CATHODE SECTION OF OSC. COIL
Rg = 20000 OHMS

92CS-6616

OPERATION CHARACTERISTICS WITH SELF-EXCITATION

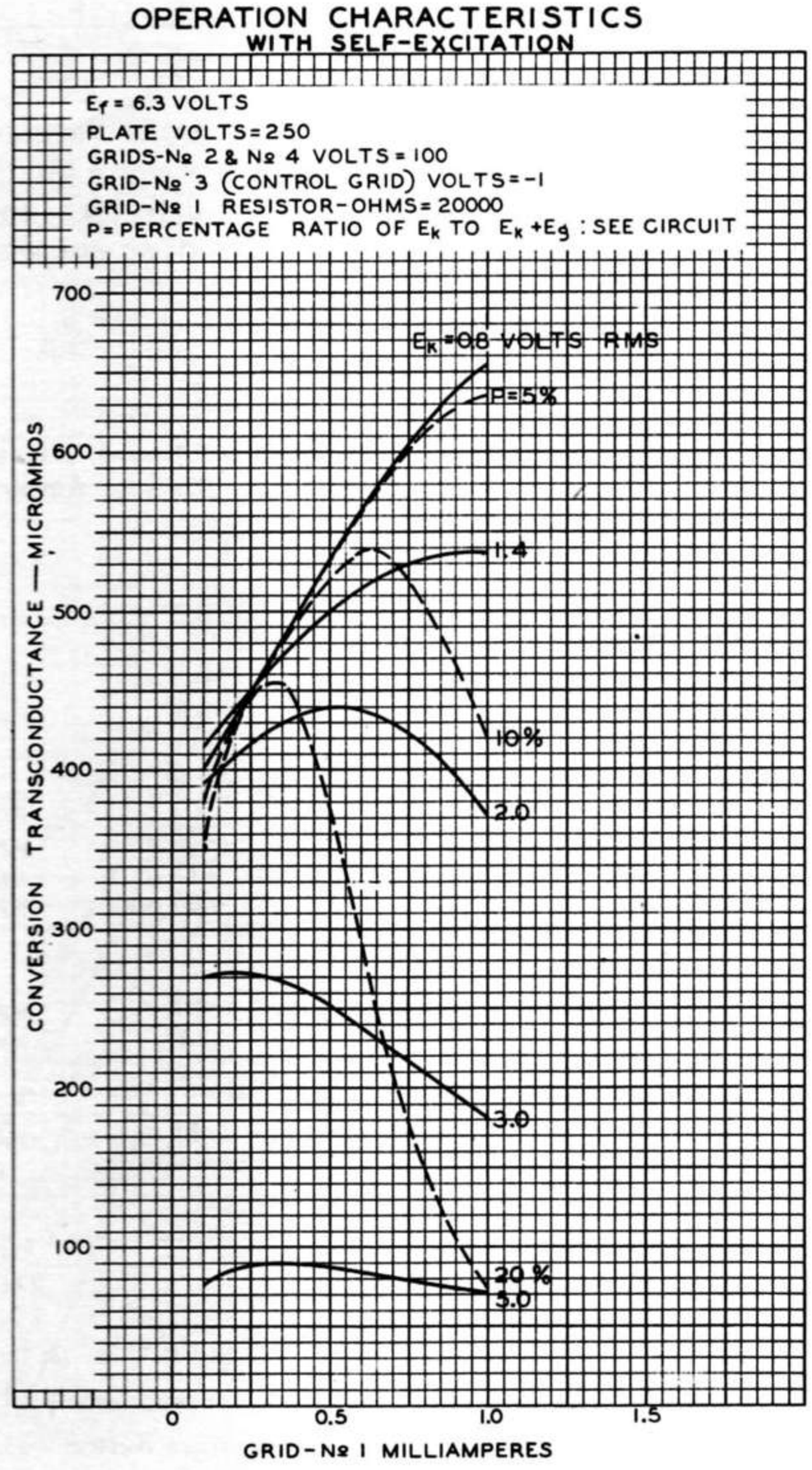

92CM-6625

OPERATION CHARACTERISTIC
WITH SELF-EXCITATION

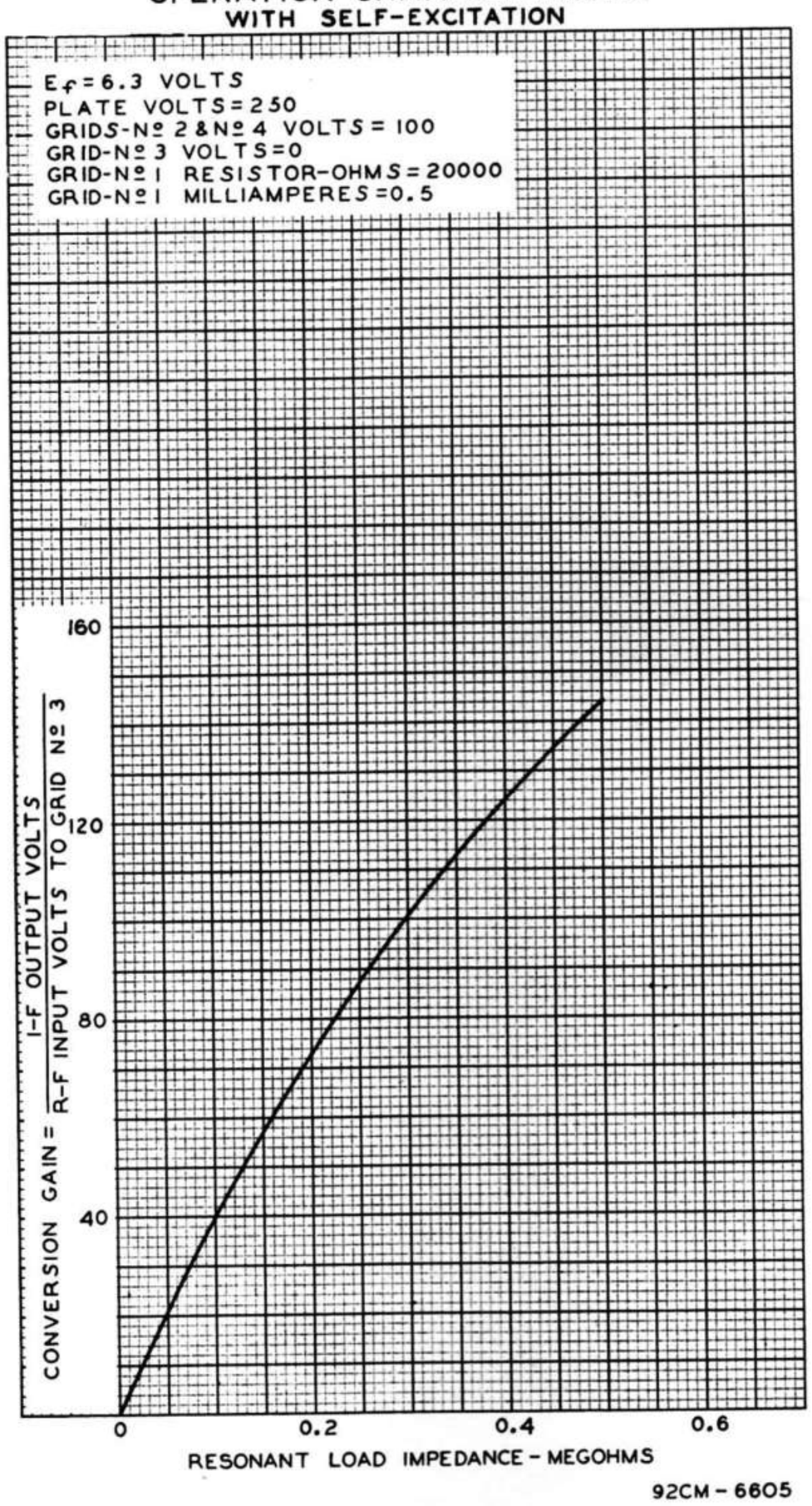

92CM-6605

OPERATION CHARACTERISTICS

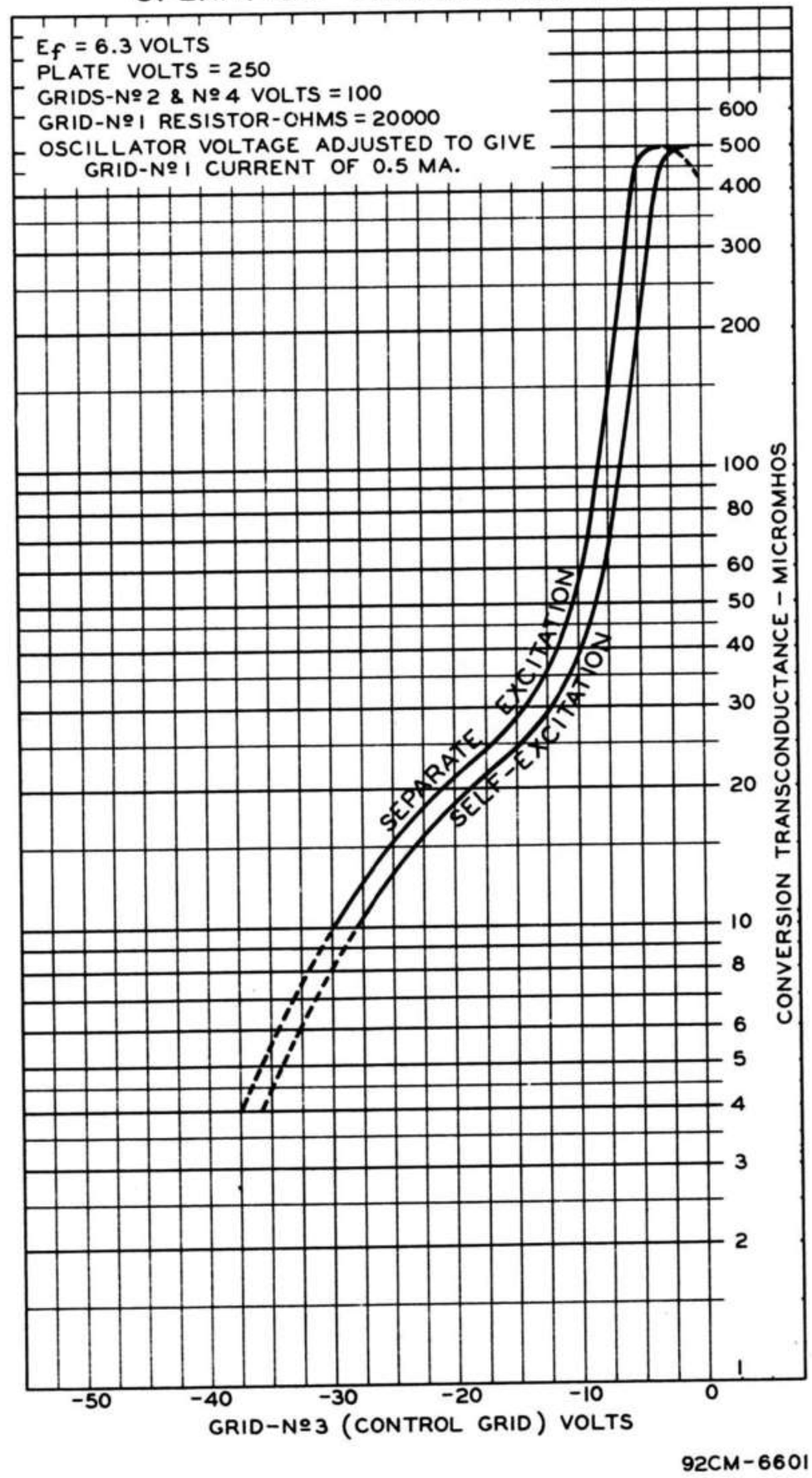

92CM-6601

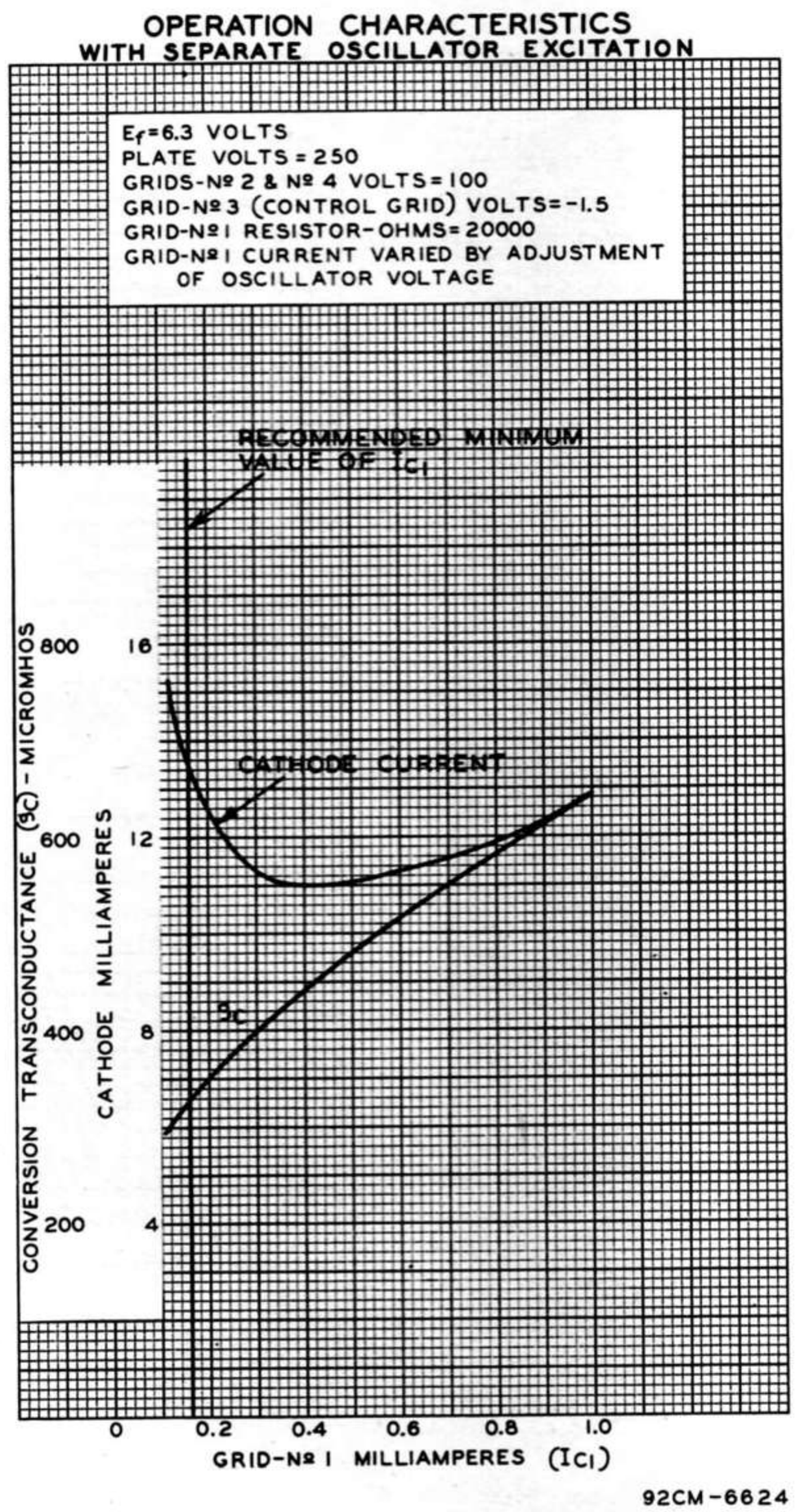
OPERATION CHARACTERISTICS
WITH SEPARATE OSCILLATOR EXCITATION
Ef=6.3 VOLTS
PLATE VOLTS = 250
GRIDS-Nº 2 & Nº 4 VOLTS = 100
GRID-Nº 3 (CONTROL GRID) VOLTS=-1.5
GRID-Nº 1 RESISTOR-OHMS=20000
GRID-Nº 1 CURRENT VARIED BY ADJUSTMENT OF OSCILLATOR VOLTAGE
RECOMMENDED MINIMUM VALUE OF Ic1
CATHODE CURRENT
gc
CONVERSION TRANSCONDUCTANCE (gc) - MICROMHOS
CATHODE MILLIAMPERES
800
600
400
200
16
12
8
4
0
0.2
0.4
0.6
0.8
1.0
GRID-Nº 1 MILLIAMPERES (Ic1)
92CM-6624